产品特点 Material & Characteristic

- 铸铝合金外壳，压铸成型，表面经静电喷塑，结构轻巧。
- 透明件采用优质防眩光钢化玻璃，具有防眩光，抗紫外线功能能有效减少对在场人员眼睛的刺激，避免产生不适和疲劳感。
- 照明角度大，范围广，光线均匀柔和。
- 灯具与电器箱为一体化设计，连接简单，维护方便。
- 吸顶式、侧壁挂式等多种安装方式，适应各种不同的工作环境。

- Cast aluminum, die-casting molding, the surface treated by electrostatic spray, lightweight structure.
- High-quality pieces of optical glass anti-glare with functions of anti-glare light and anti-ultraviolet that can effectively reduce discomfort and fatigue to eyes of the staff on spot.
- Wide lighting scope, extensive coverage and uniform soft light.
- Integration of electrical parts and luminaire design, easy installation and convenient maintenance.
- Can be ceiling or wall installation, etc. Adaptive to different working environment.

应用范围 Applications

- 建筑物、体育场、广场、码头、绿化照明、广告、大厦外景、车站、铁路、隧道、港口等户外照明。
- Buildings, stadiums, squares, docks, green lighting, advertising, building outlines, stations, railways, tunnels, ports and other outdoor lighting.

配光曲线 Luminous intensity cure

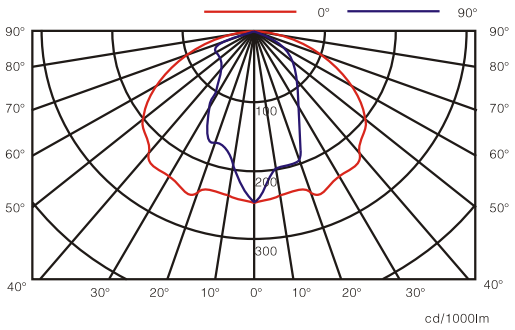

技术参数 Product Parameter

IP 65

型号 Model	光源/灯功率 lamp	灯头 Base	电压/频率 Voltage & frequency
HQBN-70L/FG21	MH/HPS 70W	E27	220V/50Hz
HQBN-100L/FG21	MH/HPS 100W	E27	220V/50Hz
HQBN-150L/FG21	MH/HPS 150W	E27	220V/50Hz

光源安装步骤 Lamp installation steps:

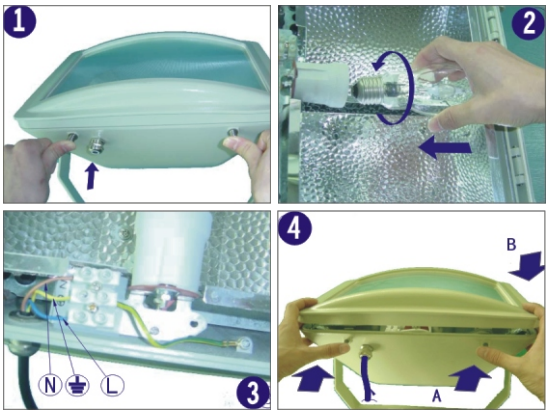

光源安装步骤：

步骤一：用手按图1所示按下灯具面盖的开关器，灯具面盖即可打开。
步骤二：灯具面盖打开后请按图2所示把光源装入灯座内，注意：安装光源时请先带上布质手套以保护光源。
步骤三：光源装好后，把外部电缆穿过防水接头再按接线标示接入接线端子内。
步骤四：电源线接好后合上灯具面盖，注意必须先按下开关器把弹扣向后顶开，让灯具面盖的铝口落在弹扣的前面，然后才能把面盖合上，否则会出现面盖合不上的现象，顺序如图A,B所示。

Lamp installation steps:

Step One: Manually press the luminaire surface covered switch shown in Figure 1. Then the cover is open.
Step Two: Put the light source into the lamp holder as shown in Figure 2 when the cover is open. Note: Please wear the cloth gloves to protect the lamp.
Step three: After fixing the lamp, put the cable through the waterproof external wiring connectors and then connect to terminal blocks as per the wiring diagram.
Step four: After connection of the power cord then close the cover. Firstly please press the switch back to the top button open shell, so that the aluminum cover surface missile landed in front of the deductions, and then close the cover. Other wise they will the cover cannot close. The steps show in Figure A, B.
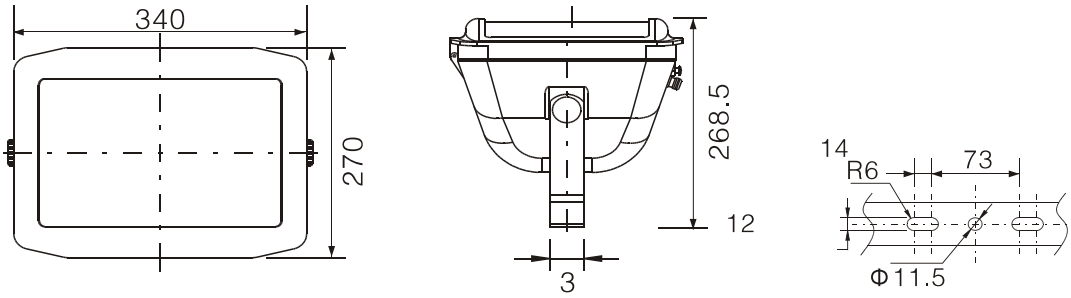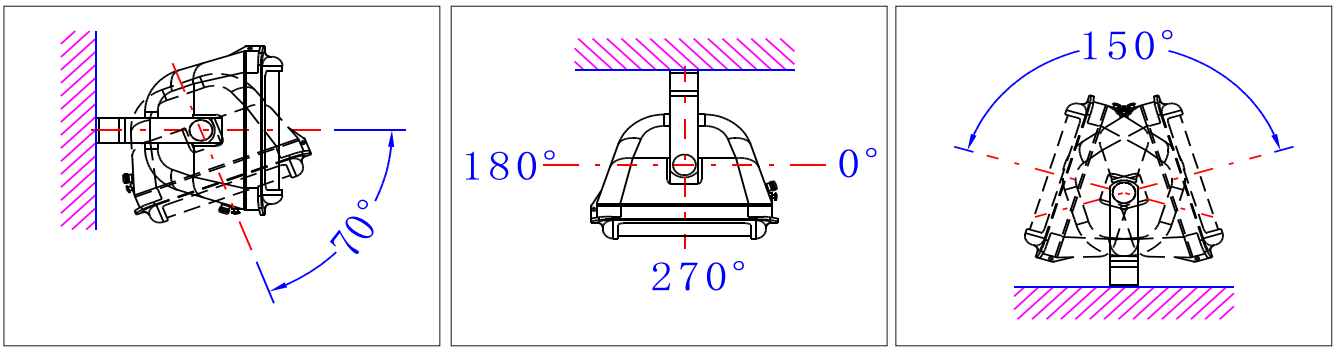
灯具尺寸及安装方式 Luminaire installation: